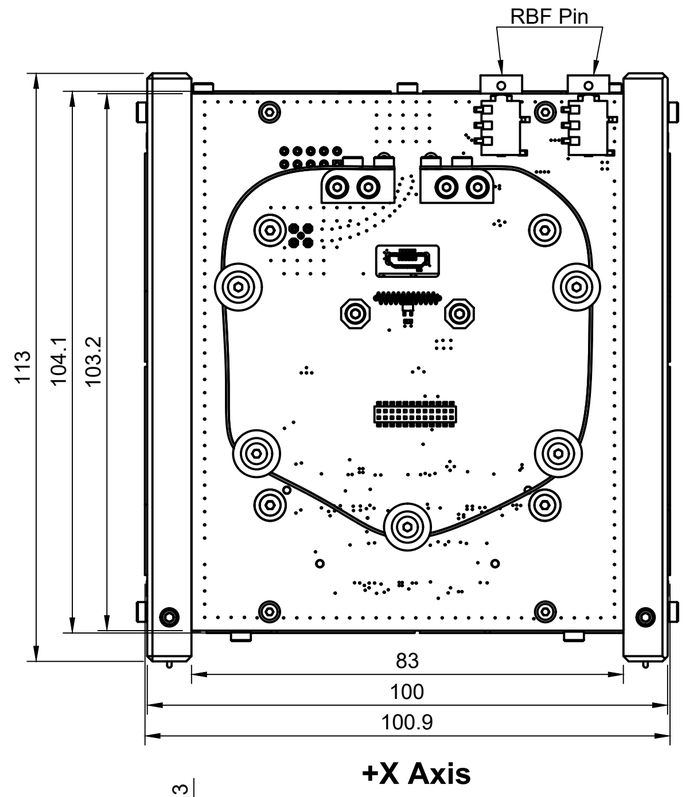

+X Axis

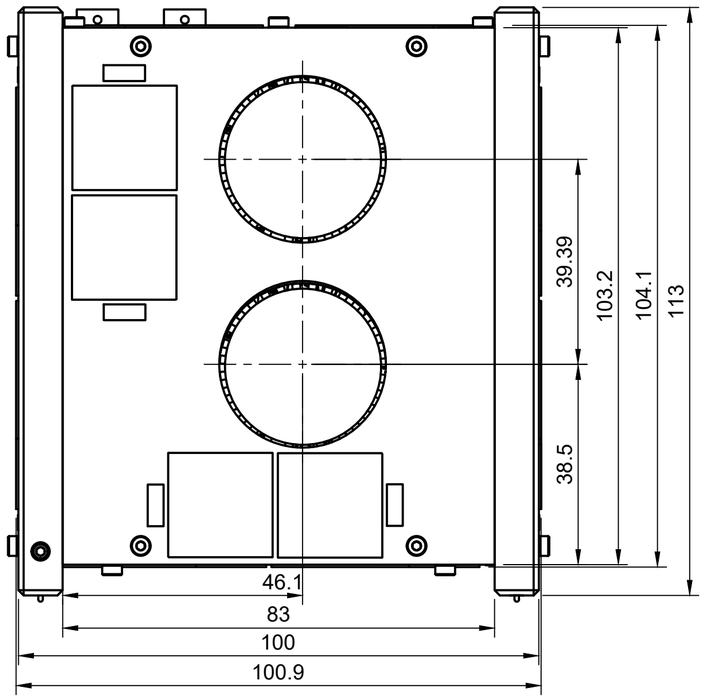

-X Axis

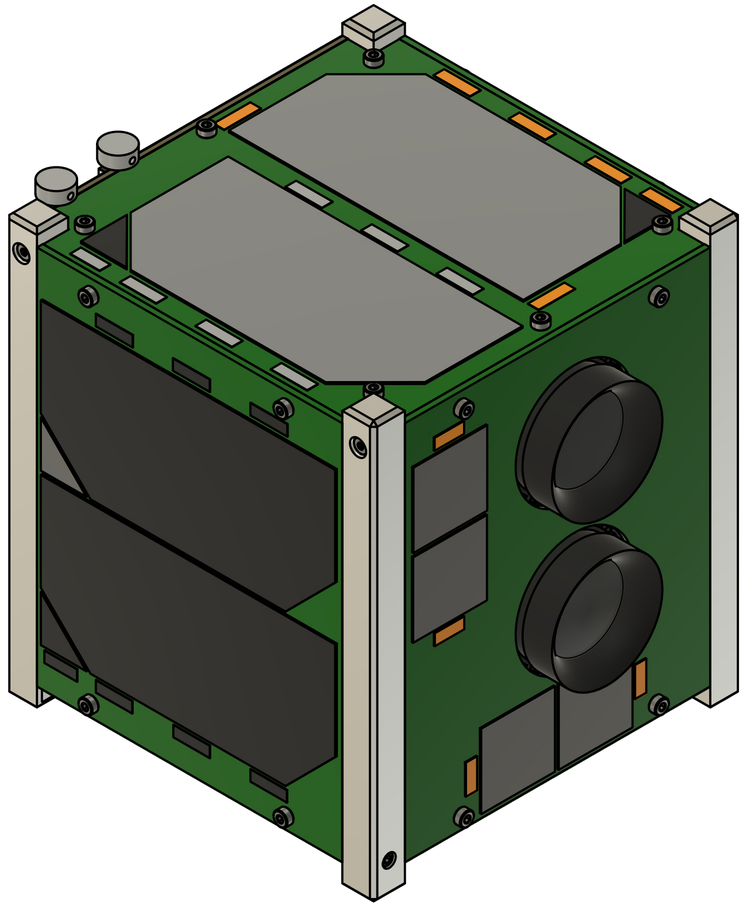

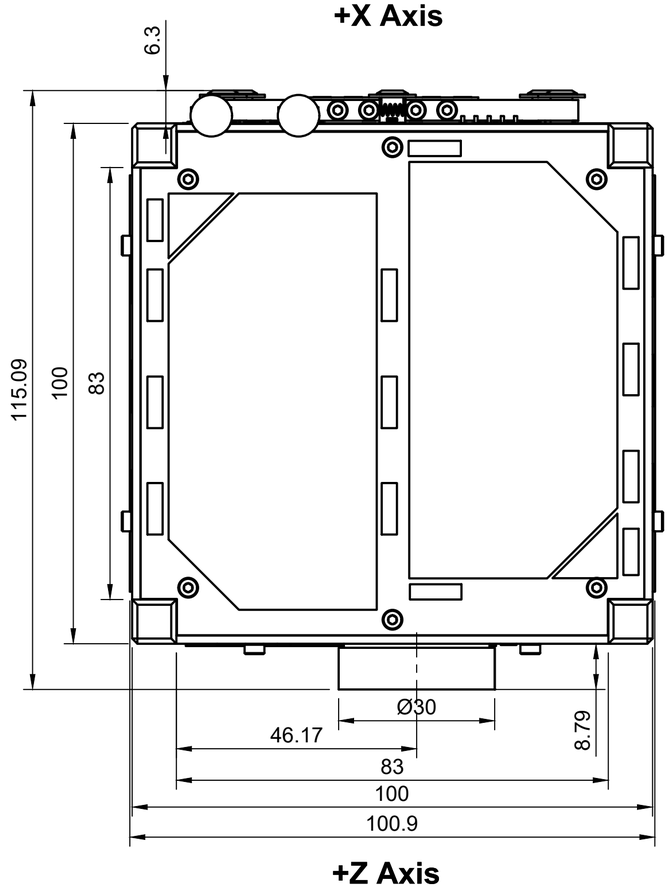

+Z Axis

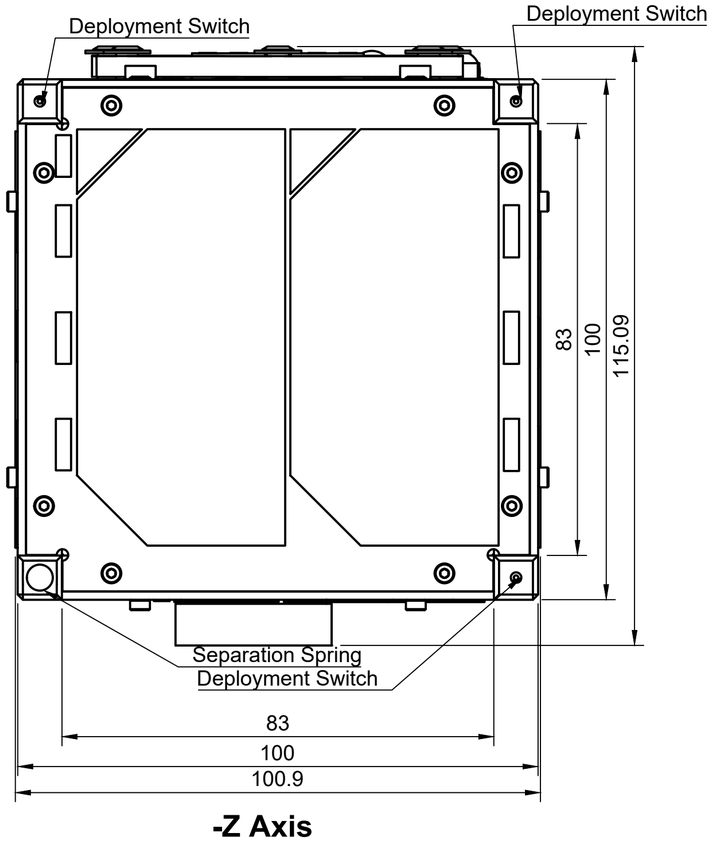

-Z Axis

Dept. Structure	Technical reference	Created by SlippersTo Satellite 12/19/2024	Approved by Rishav Adhikari 19-12-24
		Document type Isometric Drawing	Document status
		Title S2S_Satellite_Dimensions	DWG No.
			Rev. / Date of issue 19-12-24 / Sheet 1/2

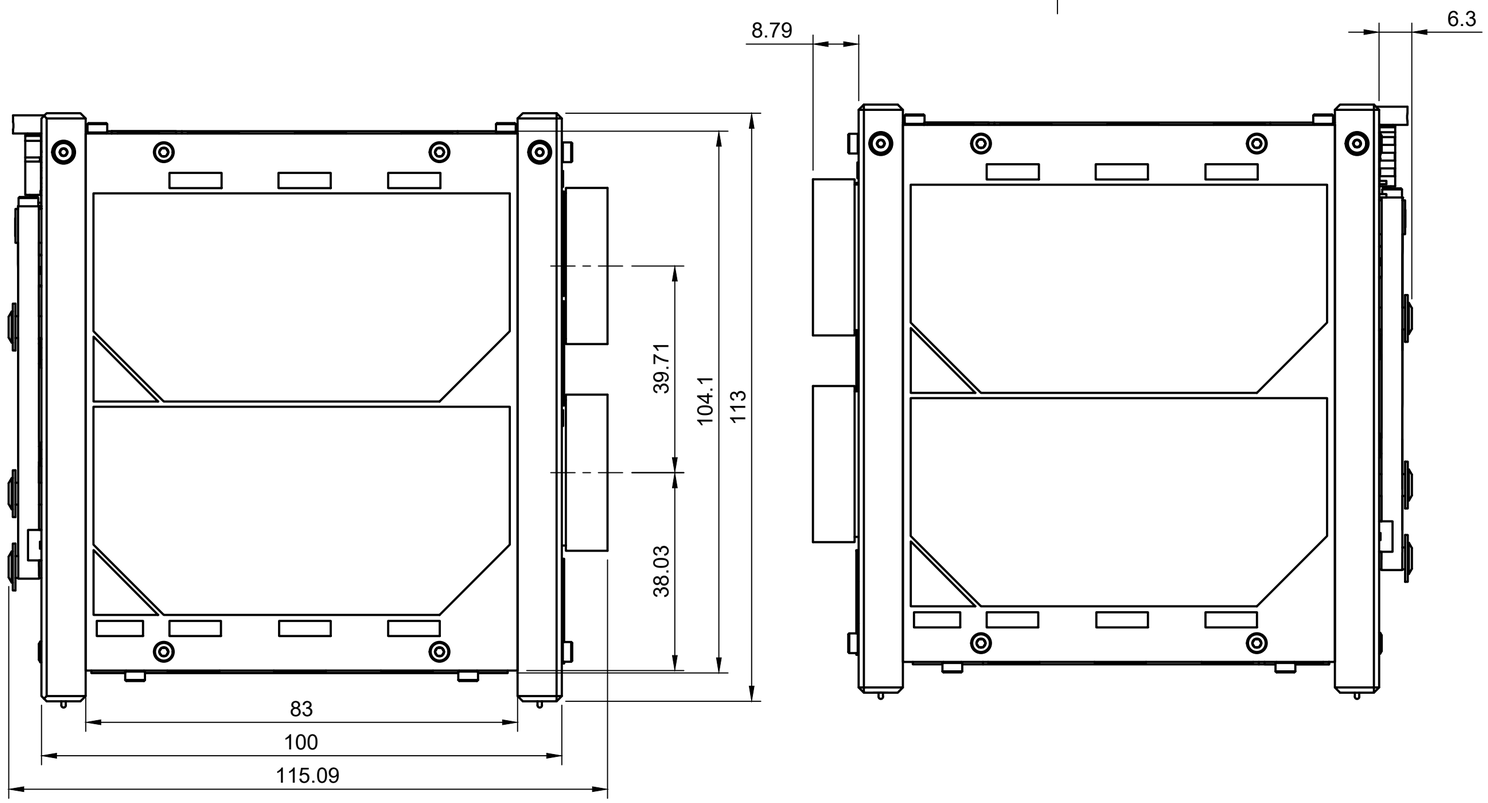

Dept.	Technical reference	Created by	Approved by
Structure		SlippersTo Satellite 12/19/2024	Rishav Adhikari 19-12-24
		Document type: Isometric Drawing	Document status
		Title: S2S_Satellite_Dimensions	DWG No.
			Rev. / Date of issue: 19-12-24 / Sheet: 2/2